Freescale Semiconductor
CodeWarrior™ QUICC Engine™ Utility
Release Notes for SW Version 1.2 or Higher

Document Number: CWQEUPP
Doc. Rev. 0, 12/2006
SW Ver. 1.2 or Higher

CodeWarrior™ QUICC Engine™ Utility Release Notes

Overview

This patch (1.2.1) is made to fix several issues in the 1.2 release (see paragraph *7. Errata*) mainly on the QEU pin muxing environment. The Device Drivers kept unchanged.

This document describes the main features included in the CodeWarrior™ QUICC Engine™ Utility (QEU) version 1.2 , which is based on the Netcomm Software (SW) device drivers release 1.2.

The result of the QEU is a C source file containing the initialization Netcomm SW Application Programming Interface (API) calls.

Contents

1. Supported Devices 2
2. Configurable Protocols And Performance Calculator 2
3. Supported Peripherals 3
4. New / Modified Features 4
5. Use cases 5
6. System configuration 7
7. Errata 8
8. Backward Compatibility 11

© Freescale Semiconductor, Inc., 2006. All rights reserved.

Features included

1 Supported Devices

The follwing devices are supported for the QEU:

- MPC8360
- MPC8358
- MPC8323
- MPC8321
- MPC8568 - only for PinMuxing

2 Configurable Protocols And Performance Calculator

Table 1 describes the all protocol / drivers that are supported in QEU. In the same table, it also describes the performance calculator tool. This tool gives a calculated estimation on the QE load based on the configuration provided by the user's application per protocol.

NOTE

The performance calculator is optional and licensed. Should the user's application need this tool they must contact their local sales person to sign an NDA prior to getting this option.

Table 1. Protocols/Drivers Supported in the QEU

Protocol/Drivers	Configurable Protocol/Drivers	Performance Calculator Protocol/Drivers
GEthernet	Yes	Yes
ATM - AAL0	Yes	Yes
ATM - AAL5	Yes	Yes
ATM - AAL2	Yes	Yes
ATM - AAL1	Yes	Yes
Serial ATM (MTC)	Yes	
HDLC UCC	Yes	Yes
HDLC MCC	Yes	Yes
HDLC QMC	Yes	Yes
Transparent UCC	Yes	Yes
Transparent MCC	Yes	Yes
Transparent QMC	Yes	Yes
UART	Yes	Yes
SPI	Yes	Yes

Table 1. Protocols/Drivers Supported in the QEU (continued)

Protocol/Drivers	Configurable Protocol/Drivers	Performance Calculator Protocol/Drivers
SS7 MCC	Yes	Yes
I2C	Yes	Yes
L2Switch	Yes	
USB Device (Client)	Yes	
ML/MC PPP		Yes
BISYNC		Yes
Interworking Eth to AAL5	Yes	Yes
Interworking Eth to AAL2	Yes	Yes

The performance calculator can provide the following estimated loads:

- QE RISC load
- UCC / Protocol
- Specific configuration

NOTE

The performance calculator is supported only for MPC8360 device.

3 Supported Peripherals

Table 2 defines the peripherals drivers that are supported in the QEU.

Table 2. Supported Peripherals

Peripheral drivers	Supported by QEU
DDR	Yes
LBIU	Yes
IPIC	Yes
MMU	Yes
Cache (I/D)	Yes
LAW	Yes
PCI	Yes
SEC 2.0	Yes
DUART	Yes
I2C	Yes

Table 2. Supported Peripherals (continued)

Peripheral drivers	Supported by QEU
RTC	Yes
PARIO	Yes
TDM	Yes
UPC	Yes

NOTE

QEU also provides full pin muxing support for all devices. The pin muxing tool is responsible for pin allocation management, and preventing multiple use of the pins.

4 New / Modified Features

The main new features available around the above devices, with the QEU are:

- Updates for NetComm SW device drivers release 1.2
- New features added:
  - Support for MPC8321 and MPC8323 devices
  - Pin muxing support for MPC8568 device
  - DUART
  - PCI
- Features updated for NetComm SW device drivers release 1.2:
  - System initialization modules: CACHE, DDR, IPIC, LAW, LBIU, MMU, PARIO, RTC
  - Peripheral modules: I2C, SPI, TDM, UPC, SEC 2.0
  - Protocol modules: Ethernet, ATM AAL0, AAL5, AAL2, AAL1, Transparent (UCC, MCC), HDLC (UCC, MCC), L2Switch, MCC SS7, MTC (Serial ATM), QMC, UART, Interworking (Ethernet to ATM), USB Device (Client)
- Performance calculator updated

Table 3 describes the performance calculator support status.

Table 3. Performance Calculator Support Status

Module	Implementation Status	Verification Status	Verification versus Device
Ethernet	Implemented	Verified vs xls	Verified
AAL5	Implemented	Verified vs xls	Verified
AAL2	Implemented	Verified vs xls	Ongoing
PPP	Implemented	Verified vs xls	
MCC HDLC	Implemented	Verified vs old PFC	
Interworking (Eth -> ATM)	Implemented	Ongoing	
Interworking (ATM -> Eth)	Implemented for:		
	AAL5	Ongoing	
	AAL2 SSSAR	Ongoing	
AAL0	Implemented	Verified vs xls	
AAL1	Implemented	Ongoing	
BISYNC	Implemented	Verified vs xls	
UCC HDLC	Implemented	Verified vs xls	
QMC	Implemented	Verified vs xls	
UART	Implemented	Verified vs xls	
L2Switch	Implemented	Verified vs xls	
MCC SS7	Implemented	Verified vs old PFC	
MCC Transparent	Implemented	Verified vs old PFC	
UCC Transparent	Implemented	Verified vs old PFC	
USB			
SPI	Implemented	Verified vs old PFC	
I2C	Implemented	Verified vs old PFC	
CES			

5 Use cases

The package contains use casese for MPC8360 and MPC832x devices using MDS boards:

- **Ethernet use cases**
  - GethUseCases: simple use cases, ExtPhy use case, MassiveCross use case
- **ATM use cases**
  - AtmAal05UseCase: AAL0/AAL5 use cases in internal and external loopback
  - AtmAal1UseCase

  - AtmAal2UseCase
  - MTC (serial ATM) use cases
    - MtcMccUseCase
    - MtcUccUseCase
- **HDLC use cases**
  - UccHdlcUseCases
  - MccHdlcUseCases
- **Transparent use cases**
  - UccTransUseCases: raw and framed
  - MccTransUseCases: regular/super channels
- **SS7 use case (on MCC)**
  - MccSs7UseCases
- **SPI use case**
  - SpiLoopBackUseCase
- **I2C use case**
  - I2cBootUseCase
- **L2SW use case**
- **QMC use cases**
  - QmcUseCases: basic HDLC/Transparent channels, HDLC channels on multiple UCCs, joined HDLC and Transparent channels
- **RTC use cases**
- **UART use cases**
  - UccUartUseCases
- **SEC 2.0 use case**
- **USB device use case**
- **Interworking use cases:**
  - Eth2EthUseCase and Eth2EthExtPhyUseCase
  - Eth2AtmAal5UseCase and Eth2AtmAal5ExtPhyUseCase
  - Aal5Atm2EthUseCase and Aal5Atm2EthExtPhyUseCase
  - IWUseCaseDemoApp - IP_DSLAM_DemoApp
- **PCI use case**
- **DUART use case**

Note that there are default values for the UCC configuration that can be modified and downloaded to run the device. Also note the MPC8358 and MPC8321 were not tested on the hardware.

6 System configuration

Figure 1 describes the system configuration.

- MPC8360E Device revision 1.2 / MPC8323E Device revision 1.0
- CW for EPPC revision 8.7 built 60605
- ccsim2 server version ART Build: REL_CCSIM2_D2_35 03-2-06
- USB TAP command converter
- Boards
  - MPC8360E PB Prototype1 S/N: 0014 / MPC8323E PB Prototype1 S/N: 0110
  - PIB assembly 0.3 / PILOT
  - QOC3 assembly 0.2 / PROTO
- Netcomm SW device drivers release 1.2
- Windows XP SP1 & SP2

NOTE

It is highly recommended to read the device errata before using the QEU and to have the same environment when using the QEU.

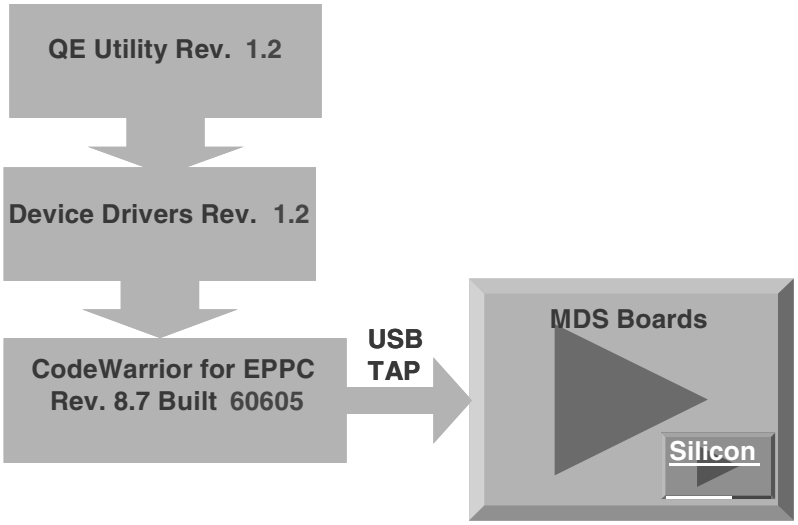

Figure 1. System Configuration

Table 4 defines minimal system requirements for QEU.

Table 4. Minimal System Requirements

Hardware	PC with 1800 MHz Intel ® Pentium ® III - compatible processor 256 MB RAM
Operating system	Microsoft ® Windows XP SP2
Free disk space	500 MB for CodeWarrior tools Additional space required for project files

7 Errata

Table 5 describes the fixed issues.

Table 5. Fixed issues

Bug ID	Summary	Description	Affected version	Disposition
CWQEU1	Bug: HDLC Transparent Bysinc uart pin allocation lost when project reopens	The pinmux information for the transparent, bysinc, hdlc and uart protocols is reset when a saved QEU project is reopened.	1.1, 1.2	fixed in QEU patch 1.2.1
CWQEU2	Bug: browse pin muxing database at new project startup doesn't work	Browse pin muxing database at new project startup doesn't work. The project is started without the database.	1.2	fixed in QEU patch 1.2.1
CWQEU3	Bug: inout pins reported as output pins	IO pins are reset to Output pins	1.2	fixed in QEU patch 1.2.1
CWQEU6	Issue: USB device mode non functional	The current rev of the tool do not produce USB device code compatible with the NetCommSw drivers	1.1	fixed in 1.2
CWQEU7	Bug: Interface blocked on multi datapool conflict	When a multi data pool conflict occurs, the user interface is stuck on the error and does not allow user to resolve the issue.	1.1, 1.2	fixed in 1.2
CWQEU8	Clocks dividers for csv not set globaly	The current tool allows the user to set system frequency in multiple places such as SPI and DDR. This can result in a user setting error that may be undetected.	1.1,1.2	fixed in 1.2
CWQEU10	Wrong font color used in UCC	When setting both UCC1 and UCC2 in 1000kbps Tx and Rx the status of UCC2 is shown with blue. Blue text is reserved for default mode and should not be used in such cases	1.1	fixed in 1.2
CWQEU11	Error in Master Mphy pin mux	Only the UPC1-UTOPIA16 Master Mphy pin mux is allowed regardless of user setting	1.1	fixed in 1.1
CWQEU12	Conflict between UCC1 TBI and UPC2 Mphy	An unexisting conflict between UCC1 TBI and UPC2 Mhy is signaled in QEU by the PinMux tool.	1.1,1.2	fixed in 1.2

Bug ID	Summary	Description	Affected version	Disposition
CWQEU15	Conflict analysis window is displayed multiple times.	Open a new 8360 project without constraints. Select both UCC1/UCC2 as GMII. Now click on TDMs. Chose TDM A. Immediately a conflict window pops up and conflicts are retrieved and shown. Wait until done (Takes very long for just five pins or so to check. Why?). Click OK to close the "conflict analysis" window. Click OK to close the "Pinmuxing information" message. The conflict analysis window with the included wait and the information requester pop up again and you must do the same thing again before you can try another TDM.	1.2	fixed in QEU patch 1.2.1
CWQEU16	Crash on L2Switch protocol	The tool crashes on opening the L2Switch configuration window	1.2	fixed in QEU patch 1.2.1
CWQEU17	Crash on MTC-UCC when the MTC-UCC use case is opened	There is a crash on MTC-UCC when the MTC-UCC QEU project file use case is opened.	1.2	fixed in QEU patch 1.2.1
CWQEU18	The forced registers for UPC2 affect the registers of the UPC1	When you force a register in the UPC2, the forced value is set for a register in the UPC1.	1.2	fixed in QEU patch 1.2.1
CWQEU19	Issue: the status of the instruction/data cache is not exported for external modules (MMU)	The status (enabled/disabled) of the instruction/data cache is not exported. In the MMU, the "Cache enable" parameter is always disabled.	1.2	fixed in QEU patch 1.2.1
CWQEU20	Issue: in the generated code the initialization of the filters doesn't take into account the links between the filters	The initialization doesn't take into account the links between the filters. The initialization is linear and in some cases this initialization is wrong.	1.2	fixed in QEU patch 1.2.1
CWQEU21	Bug: crash for a connection descriptor linked to a ethernet device with Tx only for the lw communication mode	If you try to add a connection descriptor linked to a ethernet device with Tx only for the lw communication mode, the application crashes.	1.2	fixed in QEU patch 1.2.1
CWQEU22	Issue: the default button in the addvanced ethernet configuration windows doesn't work	The default button in the addvanced ethernet configuration windows doesn't work.	1.2	fixed in QEU patch 1.2.1

Bug ID	Summary	Description	Affected version	Disposition
CWQEU23	Issue: PASSTHROUGH filters are not available for the extended filtering	PASSTHROUGH filters are not available for the extended filtering.	1.2	fixed in QEU patch 1.2.1
CWQEU24	Bug:DMA's that have external pins are not sow as system functions	DMA's that have external pins must be moved as system functions rather than QE functions.	1.2	fixed in QEU patch 1.2.1

Table 6 describes the known issues.

Table 6. Known issues

Bug ID	Summary	Description	Affected version	Disposition
CWQEU25	Bug: Problem with the GETH interfaces on 832x	An error message about the wrong GEth interface on 832x is detected only if the external Phys are enabled.	1.2	fixed in QEU 1.3
CWQEU4	Feature request: GUI does not show which port pins are mux'd with external DMA handshake signals	Need to show which port pins are mux'd with the external DMA handshake signals	1.1, 1.2	for the 8350 will be fixed in the QEU 1.3. The fix for the 8568 and 832x is being investigated
CWQEU5	Feature request:Missing info in Pin mux	In the "Tools/Show pin mux report" which shows what resource are used, the CLKs and BRG are missing.	1.1, 1.2	fix planned in 1.4
CWQEU9	Feature request: Baud rate generator information not passed to other module	Baud rate generator information needs to be shared with other module such as UPC.For example a relationship must be maintained between internal clock frequency in UPC and the BRG used by the UPC. The current rev of the tools does not take this in account.	1.1,1.2	fix planned in 1.4
CWQEU13	Issue: Pins reserved by user ignored	QE utility does not allow for user selection of GPIO in parallel with the I/O panel. The GPIO driver and the PinMux allocation configure the same pins. The PinMux allocation may overwrite GPIO configuration.	1.1, 1,2	No schedule for the fix.investigating the fix.
CWQEU14	Dynamic PMX constraint: for IR Clock for UPC are not supported	There are PMX constrains that are dynamic, depending on the value of the Rx/Tx clocks used. The current design does not allow such dynamic constrains to be supported.	1.1,1.2	fix planned for 1.4

8 Backward Compatibility

QEU project files generated by Beta 0.6 and lower can not be used with QEU release 1.2.
QEU project files generated by Release 1.0 and 1.1 are supported by the QEU Release 1.2.

NOTE

Required procedure for updating QEU 1.2 projects with the 1.2.1 :

- in order to update QEU 1.2 projects created with pinmuxing support, use "Load new Pinmuxing database" option and load the same pmx database used when the project was created because the existing pmx database contained by your project is corrupted. After that, save the QEU project by overwriting original project: File -> Save.

For any issue related to QEU please send emails to **CWQEUT@freescale.com**.

How to Reach Us:

Home Page:
www.freescale.com

email:
support@freescale.com

USA/Europe or Locations Not Listed:
Freescale Semiconductor
Technical Information Center, CH370
1300 N. Alma School Road
Chandler, Arizona 85224
(800) 521-6274
480-768-2130
support@freescale.com

Europe, Middle East, and Africa:
Freescale Halbleiter Deutschland GmbH
Technical Information Center
Schatzbogen 7
81829 Muenchen, Germany
+44 1296 380 456 (English)
+46 8 52200080 (English)
+49 89 92103 559 (German)
+33 1 69 35 48 48 (French)
support@freescale.com

Japan:
Freescale Semiconductor Japan Ltd.
Headquarters
ARCO Tower 15F
1-8-1, Shimo-Meguro, Meguro-ku
Tokyo 153-0064, Japan
0120 191014
+81 2666 8080
support.japan@freescale.com

Asia/Pacific:
Freescale Semiconductor Hong Kong Ltd.
Technical Information Center
2 Dai King Street
Tai Po Industrial Estate,
Tai Po, N.T., Hong Kong
+800 2666 8080
support.asia@freescale.com

For Literature Requests Only:
Freescale Semiconductor
Literature Distribution Center
P.O. Box 5405
Denver, Colorado 80217
(800) 441-2447
303-675-2140
Fax: 303-675-2150
LDCForFreescaleSemiconductor
@hibbertgroup.com

Information in this document is provided solely to enable system and software implementers to use Freescale Semiconductor products. There are no express or implied copyright licenses granted hereunder to design or fabricate any integrated circuits or integrated circuits based on the information in this document.

Freescale Semiconductor reserves the right to make changes without further notice to any products herein. Freescale Semiconductor makes no warranty, representation or guarantee regarding the suitability of its products for any particular purpose, nor does Freescale Semiconductor assume any liability arising out of the application or use of any product or circuit, and specifically disclaims any and all liability, including without limitation consequential or incidental damages. “Typical” parameters which may be provided in Freescale Semiconductor data sheets and/or specifications can and do vary in different applications and actual performance may vary over time. All operating parameters, including “Typicals” must be validated for each customer application by customer’s technical experts. Freescale Semiconductor does not convey any license under its patent rights nor the rights of others. Freescale Semiconductor products are not designed, intended, or authorized for use as components in systems intended for surgical implant into the body, or other applications intended to support or sustain life, or for any other application in which the failure of the Freescale Semiconductor product could create a situation where personal injury or death may occur. Should Buyer purchase or use Freescale Semiconductor products for any such unintended or unauthorized application, Buyer shall indemnify and hold Freescale Semiconductor and its officers, employees, subsidiaries, affiliates, and distributors harmless against all claims, costs, damages, and expenses, and reasonable attorney fees arising out of, directly or indirectly, any claim of personal injury or death associated with such unintended or unauthorized use, even if such claim alleges that Freescale Semiconductor was negligent regarding the design or manufacture of the part.

Freescale™ and the Freescale logo are trademarks of Freescale Semiconductor, Inc. The described product contains a PowerPC processor core. The PowerPC name is a trademark of IBM Corp. and used under license. All other product or service names are the property of their respective owners.

© Freescale Semiconductor, Inc., 2006.

Doc. Rev. 0
12/2006

freescale™
semiconductor